COST REDUCTION THROUGH VERTICAL INTEGRATION OF THE IN-SITU CONCRETE SUPPLY CHAIN

Darren Graham[1], Iris D. Tommelein[3] and Simon D. Smith

[1, 2] *School of Engineering and Electronics, The University of Edinburgh, Edinburgh, EH9 3JN, UK*
[3] Department of Civil and Environmental Engineering, The University of California at Berkeley, Berkeley, 94720, USA

Concrete is an important, widely used material in modern-day construction. The in-situ placement of concrete is performed at a significant cost for contractors. This study aimed to outline a method(s) to reduce this cost, by focusing on the reduction of the most significant costs in concreting system: material, plant hire, and resource idleness. An investigation was undertaken to determine if cost reduction could be achieved through a reconfiguration of the resource supply chain, in the form of vertical integration. In real terms this means that the contractor takes on the role of concrete manufacturer and on-site plant owner – removing the ready-mixed batch plant and on-site plant supplier from the existing supply chain. This would give the contractor more control over the key costs identified in the concreting system. To permit the vertical integration of the resources supply chain a reliable alternative to manufacturing concrete in an external batch plant was required. The financial viability of using a volumetric mobile mixer as an alternative source of concrete was assessed. This type of mixer manufactures concrete at the required location on a project with a high production rate and quality of concrete. The results of a cost/benefit analysis show that the reconfiguration of the resource supply chain can produce the desired system-wide reduction in contractor costs in concrete placement.

Keywords: cost, materials management, production management, ready-mixed concrete.

INTRODUCTION

The cost of concrete placement is significant for contractors and ways of reducing this cost should be examined. To this end, an investigation was undertaken to define the actual costs that a contractor incurs in placing concrete, based upon data from real construction projects where ready-mixed concrete (RMC) was being supplied by an external batching plant. Graham et al. (2005) presented the results of this investigation at ARCOM 2005 in a paper entitled 'Cost of Concrete Placement for Contractors.' It was found that the main sources of contractor cost are: RMC material, plant hire, labour and plant idleness and a surcharge for truck mixer idleness (on site). It was suggested that a method of reducing all of these costs, systemically, should be sought, and further that such a solution may involve vertical integration of the resource supply

[1] Tel: 0131 650 7159, e-mail: simon.smith@ed.ac.uk

Graham, D, Tommelein, I D and Smith, S D (2005) Cost reduction through vertical integration of the in-situ concrete supply chain. *In:* Khosrowshahi, F (Ed.), *21st Annual ARCOM Conference*, 7-9 September 2005, SOAS, University of London. Association of Researchers in Construction Management, Vol. 2, 1005-14.

chain. In real terms, this means that a contractor would take on the role of concrete supplier for its own projects and also procure the on-site plant to avoid hire costs.

This study has investigated the vertical integration of the resource supply chain from a contractor's perspective. In this article, the existing supply chain is presented. Followed by a discussion on the alternative technologies available for manufacturing concrete. Then the proposed integration of the resource supply chain is presented, and a cost/benefit analysis of effecting this integration is detailed. Finally, some limitations of the proposed cost reduction method are discussed.

EXISTING RESOURCE SUPPLY CHAIN

The observed concrete pours were supplied with RMC manufactured and delivered by an external concrete batching plant, and the RMC was placed on-site via a hired concrete pump. This resource supply chain is illustrated in the value stream map shown in figure 1.

Special symbols are used in this study to depict the RMC supply chain. They are (Rother and Shook, 1998):

- 

Value-adding processes or tasks such as mixing RMC.
-  Work-in-progress (inventory).
-  An order to withdraw a product to deplete a supermarket.
-  An order to produce a product to replenish a supermarket.
-  A supermarket with controlled inventory.
- 

First-in, First-out release of resources from a task.
-  Physical pull of materials from a supermarket. This is the amount needed at the time of withdrawal, not a predetermined fixed amount.
-  Flow of product.
-  Transportation of product to customer site.
-  Product is pushed into inventory.

The following is a description of the roles and responsibilities of the players in the existing resource supply chain shown in figure 1:

- Designers (line i) specify concrete mixes either by recipe or performance (Tommelein and Li, 1999) in construction documents, which are made available to contractors (line vi) during the bid phase of a project.
- The contractor (line vi) uses this information to select placement sizes and methods (concrete pump in the observed projects) and decides upon a ready-mixed batch plant (line ii) to supply the concrete. The contractor (line vi) then schedules advance orders with the batch plant (line ii) providing approximate quantities and delivery times required. Thus securing batch plant and delivery capacity when required (NRMCA, 2001).
- The batch plant (line ii) uses the information from the contractor's advanced order to plan its raw materials inventory from its provider (line iii).

- When the placement method is chosen, the contractor (line vi) orders plant from a plant supplier (line iv). If the plant is not in stock, then the plant supplier (line iv) will need to order the plant from the plant distributor or manufacturer (line v) to provide the contractor (line vi) with the required plant by a specified date.
- Roughly 4-7 days before batching, the contractor (line vi) must call the batch plant (line ii) to confirm the details (delivery times and quantities of RMC) of the previously agreed order.
- On the day of the pour, RMC is produced by the batch plant (line ii) and transported to the project in 6 or 8 m3 revolving drum truck mixers, which then discharge a batch of RMC into a concrete pump, which is then placed, cured and finished by the contractor (line vi).

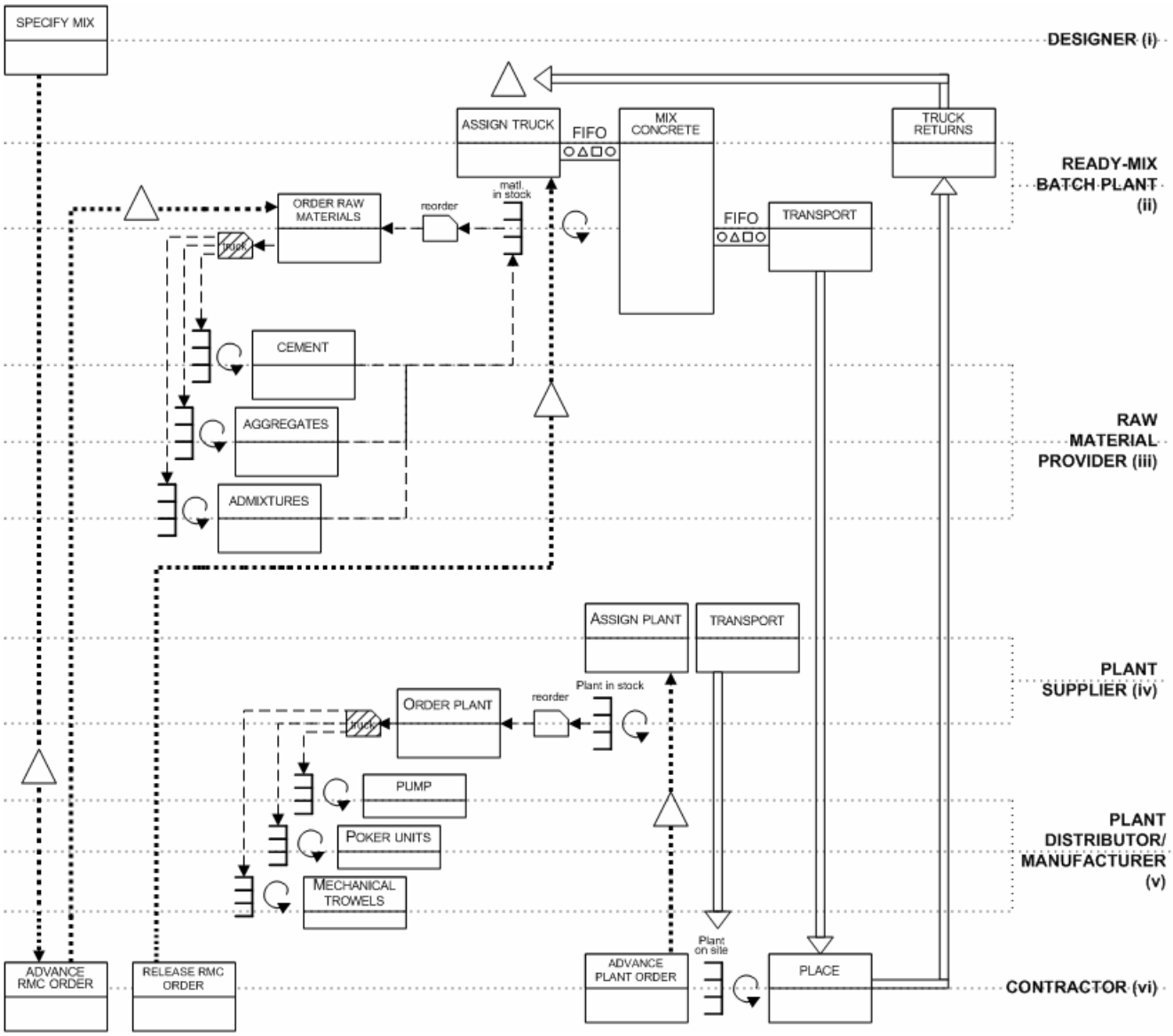

Figure 1: Value stream map of the original resource supply chain

CONCRETE MANUFACTURING TECHNOLOGIES

There are two types of mixer available for a contractor to use as an alternative to procuring RMC from a batch plant external to the project site (Sonnenberg, 1998; Ferraris, 2001): mixers that produce batches of RMC; and continuous or volumetric mixers. These two alternatives are now discussed.

Stationary batch plant

A typical stationary batch plant is shown in figure 2. It has storage bins for aggregates, a weighing bin for cement and has a cement silo attached. The required amounts of materials flow through the plant as shown in figure 2 and are placed into a truck mixer, which mixes the concrete.

The benefits of this type of plant are: that it can produce up to 68 m3/hour; a generally acceptable rate for construction – the observed projects had a maximum placement rate of 35 m3/hour; and the batch plant can be positioned wherever is most convenient on a site. However, there are significant costs associated with this plant, as a front loader is required to replenish the aggregates and truck mixers are required to deliver the material.

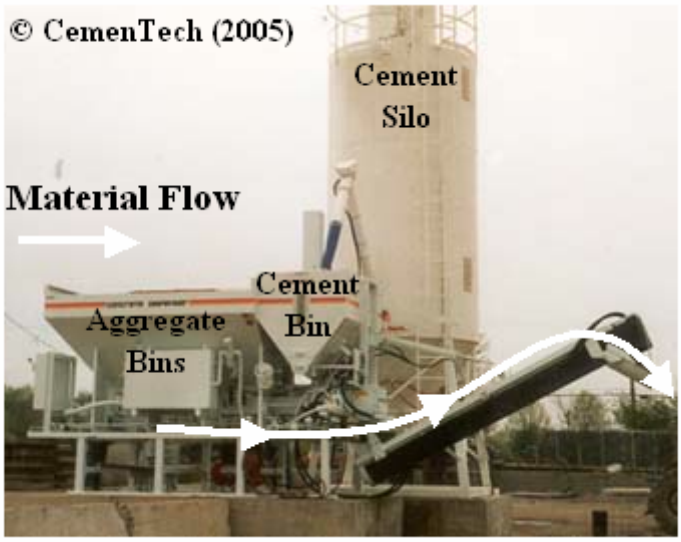

Figure 2: Stationary batch plant

Volumetric mobile mixer

A typical volumetric mobile mixer (VMM) is shown in figure 3. A VMM is usually made up of separate storage bins for aggregates, water, cement and admixtures mounted on a truck. The mix of concrete is computer-controlled and the materials are mixed in the auger at the back of the plant. The VMM can be located as close as possible to the pour area, thus concrete can be placed directly in this manner. However, it is possible that a VMM be used to feed a concrete pump to relay concrete over large distances or heights. The VMM requires a front loader to be available to maintain an inventory in the aggregate bins.A VMM is reportedly ideally suited to small pours (Ferraris, 2001). However, CemenTech, a leading manufacturer of VMM's reports that its VMM the CemenTech MCD10-200 can produce 68 m^3/hour – the same production rate as the stationary batch plant described above. Thus it is suitable for larger pours.

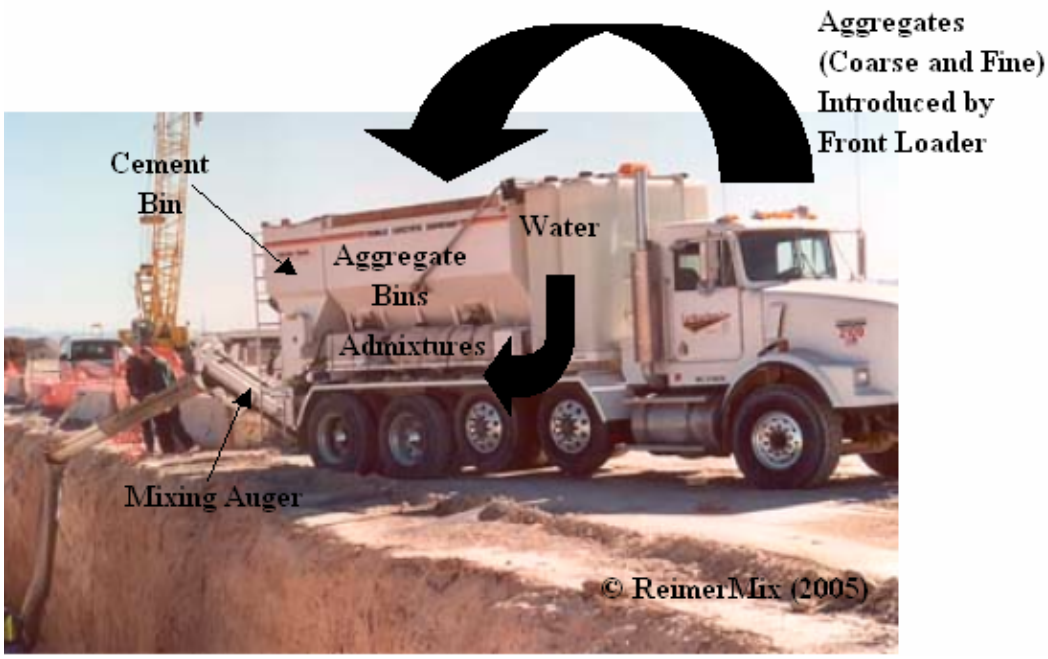

Figure 3: Volumetric mobile mixer

The VMM is not without its disadvantages. A stockpile (inventory) of aggregates would need to be kept on-hand to replenish the plant on a regular basis. Thus this method is not altogether suitable on projects were the site space is limited.

Additionally there has been some concern in the past about the quality of concrete produced by a VMM plant (Ferraris, 2001). The leading American manufacturers of VMM plant have taken notice of such criticise, and in 1999 formed the Volumetric Mixers Manufacturers Bureau (VMMB) a section of the National Ready Mixed Concrete Association (NRMCA). The VMMB aims to develop standards for volumetric mixers and agitators, and these standards have been stated in VMMB 100-01 (VMMB, 2001). These standards have been developed with existing regulations provided by:

- American Concrete Institute (ACI) in ACI 304.6R-91 (ACI, 1991) and ACI Manual of Concrete Practice, Part 1 – Materials and General Properties of Concrete (ACI, 1994);
- American Society for Testing and Materials (ASTM) in ASTM C685 produced in 1971. The latest version of this code is ASTM C685 M-01 (ASTM, 2001).
- American Association of State Highway and Transportation Officials (AASHTO) in AASHTO M-241 (AASHTO, 2004).

The VMMB report that the quality of concrete produced by VMM plant is equal, if not more consistent in quality (due to no delay in placing the material) than RMC from an external batch plant (VMMB, 2005).

When comparing the two technologies above, the need for a stationary batch plant to use truck mixers is a distinct disadvantage. This need would most likely not afford the significant reductions in contractor cost that are the aim of this study as truck mixers (even two or three) would need to be hired, leased or purchased. Thus, stationary batch plants shall not be considered further in this study as a method of implementing integration of the resource supply chain.

VMM technology shall be examined to determine if it provides a viable method of integrating the resource supply chain and reduce contractor costs in concrete placement.

INTEGRATED RESOURCE SUPPLY CHAIN

The use of a VMM by a contractor removes the external batch plant from the resource supply chain and the procurement of other plant such as a concrete pump removes the plant supplier, resulting in 3 players remaining in the integrated supply chain. This is shown in figure 4. The following is a description of the roles and responsibilities of the players in this supply chain:

- Designer (line i) provides the concrete mix specifications to the contractor (line ii) via construction documents at the bid phase.
- The contractor (line ii) selects: the placement sizes and methods; and the quantities and supplier (line iii) of raw concrete materials (sand, cement, etc.)
- An advance order is placed with the raw materials provider (line iii), based on a calculation to allow a small inventory level on the project site.
- When the contractor (line ii) is ready for placing the concrete, a front loader fills the mixer (VMM) and the concrete is placed, cured and finished.

Although the use of VMM technology and procurement of other plant has simplified the supply chain – there are now fewer players, it may be the case that the benefits of this supply chain integration may not outweigh the costs of purchasing equipment and hiring extra labour to operate the plant.

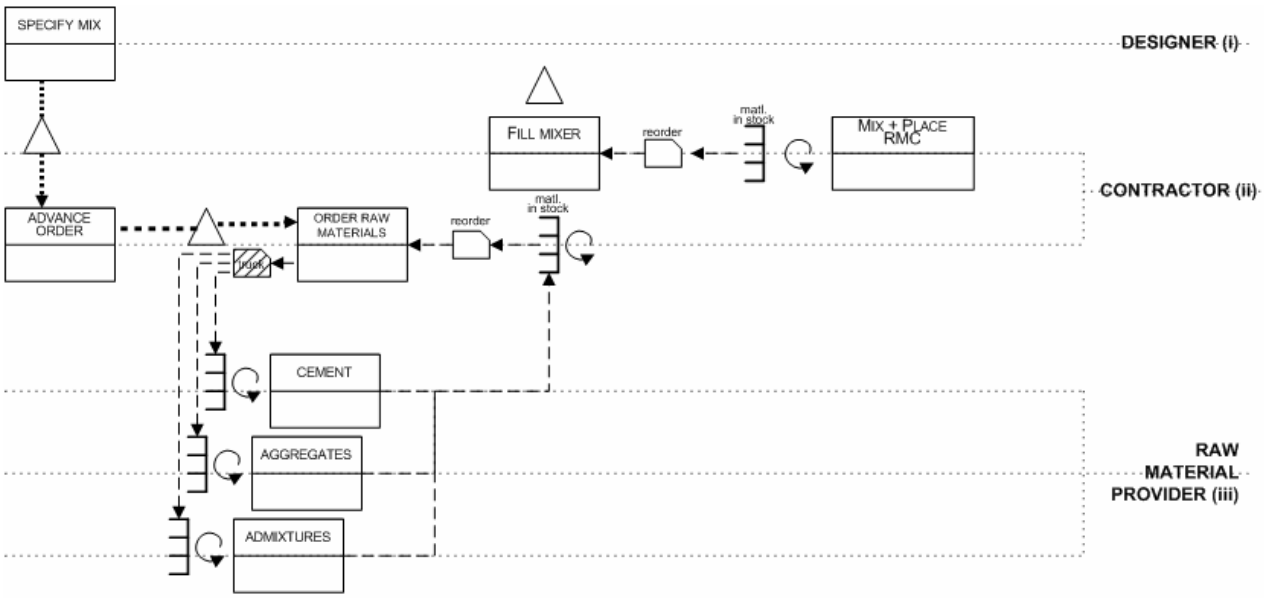

Figure 4: Proposed resource supply chain integration

COST/BENEFIT ANALYSIS OF SUPPLY CHAIN INTEGRATION

A cost/benefit analysis of integrating the resource supply chain in the manner described above has been undertaken to ascertain whether it is worthwhile. Firstly the costs were estimated, including: the capital cost of new plant; additional labour to operate the plant; and, additional plant operating costs.

Costs

To reiterate, when using a VMM the plant required is the VMM itself, a front loader and in many cases a concrete pump. Thus these are the pieces of plant considered in this cost/benefit analysis.

The cost of the new plant was obtained from estimates provided by Richie Brothers Auctioneers Inc. A VMM manufactured by CemenTech (model: MCD10-150) costs £42, 000; Caterpillar 924G Wheel (Front) Loader - £50, 000; Daewoo DCP3211 concrete pump - £70, 000.

In the cost analysis it is assumed that the plant is purchased using a business loan of £162, 000 over 15 years at a fixed rate of 7% (as quoted by HSBC UK Plc.). After 15 years the plant would be owned outright at a total cost of £332, 100 to the contractor.

The labour and plant operating costs over the 15 year period (length of loan) (table 1) are calculated based on the unit wages/operating costs presented in table 2, which take inflation into account. Additionally, it is assumed that labour will work for 10 hours/day, for 5 days/week for 4 months of a year. The costs are only for 4 months of the year as that is the length of time it took to place 6, 000 m^3 of concrete in the observed small pours.

From the above calculations the total cost of integration of the resource supply chain is £1, 060, 067 over 15 years (see table 1).

Table 1: Cost Analysis

Source of Cost	Type	Make + Model	Quantity	Cost Estimate (£)
New Plant				
	Volumetric Mobile Mixer (VMM)	MCD10-150	1	42, 000
	Front Loader	Caterpillar 924G Wheel Loader	1	50, 000
	Concrete Pump	32M	1	70, 000
				332, 100*
Additional Labour				
	VMM Operator	~	1	192, 293**
	Operator	~	1	192, 293+
				384, 586
Additional Plant Operation				
	Costs	~	1	206, 028++
	Operating Costs	~	1	137, 352+++
				343, 380
Total				**1, 060, 067**

* Inclusive of repayment of capital and interest on business loan for £162, 000 at 7% over 15 years
** Average yearly wages (Column A, Table 3) x No. hours worked/per year
+Average yearly wages (Column B, Table 3) x No. hours worked/per year
++Average yearly operating costs (Column C, Table 3) x No. hours worked/per year
+++Average yearly operating costs (Column D, Table 3) x No. hours worked/per year
No. hours worked/per year estimated as 10 hours/day, 5 days/week, 4 weeks/month and 4 months/year

Table 2: Predicted wages and operating costs

Year	Volumetric Mobile Mixer Operator Wages* £/hour	Front Loader Operator Wages* £/hour	Volumetric Mobile Mixer Operating Costs* £/hour	Front Loader Operating Costs* £/hour
2005	14.00	14.00	15.00	10.00
2006	14.27	14.27	15.29	10.19
2007	14.54	14.54	15.58	10.38
2008	14.81	14.81	15.87	10.58
2009	15.09	15.09	16.17	10.78
2010	15.38	15.38	16.48	10.99
2011	15.67	15.67	16.79	11.20
2012	15.97	15.97	17.11	11.41
2013	16.28	16.28	17.44	11.63
2014	16.58	16.58	17.77	11.85
2015	16.90	16.90	18.11	12.07
2016	17.22	17.22	18.45	12.30
2017	17.55	17.55	18.80	12.53
2018	17.88	17.88	19.16	12.77
2019	18.22	18.22	19.52	13.01

* Annual increase calculated using UK Base Rate of Inflation (1.9%)

Benefits

The benefits of resource supply chain integration have been estimated in percentage terms in table 3. These percentages were then converted into a potential reduction in unit cost (see table 3) based on an original average unit contractor cost of £53.40/ m3 (calculated from the observed pours). The following provides a summary of the reasoning behind the estimates of the benefits (as %ages of original contractor cost):

- RMC material. There are no truck mixers involved (no transportation) giving a 5% saving; supplier overheads will be reduced significantly as there is a small number of workers directly involved, no additional administration staff, and the space required is relatively small giving a 10% saving; the supplier's profit will be absorbed by the contractor saving 2% of the original contractor's cost.
- Labour idle time. RMC is placed on demand when using a VMM, resulting in less variability in the system and the labour not standing idle waiting on concrete supply, representing a 2% saving.
- On-site plant hire and operating cost. The idle time of plant outside of the pour will still remain under the proposed integration of the supply chain. However, the loan repayment is likely to be less than the hire cost of the plant, thus resulting in a 1% saving.
- No plant hire costs – the plant is owned by the contractor giving a 5% saving.
- A VMM would not be operating during idle periods, removing the idle time operating costs present in the original RMC system (1% saving).

- Finally, as stated above there are no truck mixers in use in the system, thus there is no longer a truck mixer surcharge (2 % saving).

To summarise the costs and benefits of the proposed supply chain integration:

Total cost (over 15 year period) = £1, 060, 067 (1)

Total benefit = £14.95/m^3 (2)

Payback volume of concrete (over 15 years) = (1)/(2) = 70, 900 m^3 (3)

Annual payback volume of concrete = (3)/15 = 4, 730 m^3 (4)

Table 3: Benefit Analysis

Benefits Source	Contributor to Benefit	Potential Cost Reduction (%age Total Contractor Cost)	Value of Potential Reduction (£/m^3) (£/m^3)
RMC Material			
	Transportation of RMC (Batching Plant to Project)	5	2.67
	Supplier Overheads	10	5.34
	Supplier Profit	2	1.07
Labour Hire Cost			
	Idle Time	2	1.07
On-Site Plant Hire + Operating Costs			
	Idle Time (Outside Pour)	1	0.53
	Operating Cost (Idle Time)	1	0.53
	On-Site Plant Hire (Value-adding)	5	2.67
Truck Mixer Surcharge	~	2	1.07
Total			**14.95**

The annual payback volume is the amount of concrete that a contractor must place to "break even" on the investment. Given that the contractor placed 6, 000 m^3 in 4 months in the observed projects this appears to be an achievable target. It should be noted that plant maintenance costs are not included above.

Although the integration of the resource supply chain appears to be a promising method of reducing contractor costs in concrete placement, there are some limitations that should be highlighted. These limitations are discussed next.

LIMITS OF THE PROPOSED SUPPLY CHAIN INTEGRATION

Some of the limits of the proposed supply chain integration are:

- The plant cannot be used on multiple projects, simultaneously. This creates a plant allocation problem for a contractor.
- An area of a project site is required to store aggregates – making VMM unsuitable for use on projects with limited space.

CONCLUSIONS

This paper presented a method of reducing the system-wide costs incurred by a contractor in placing concrete. This method involved vertically integrating the resource supply chain by: the contractor appropriating the role of concrete manufacturer using a site-based volumetric mobile mixer (VMM); and the contractor procuring the plant required to place concrete (e.g. concrete pump, etc.). Thus, there would be no external RMC batch plant or plant hire company involved in the resource supply chain.

A cost/benefit analysis of this vertical integration of the supply chain was undertaken and found that the proposal was a viable method of reducing the cost of placing concrete in a systemic manner. Specifically, it was determined that a contractor would need to place 4, 700 cubic metres of concrete to make the scheme pay for itself. When compared with the studied projects, which placed 6, 000 cubic metres in four months the target volume is clearly achievable.

Some caveats to this are: a volumetric mobile mixer needs to be loaded with aggregates frequently, resulting in a requirement for a stockpile of these materials. Thus the VMM is not entirely suitable for project sites that have little available space; and the VMM can only provide concrete to one project site at a time, unlike an external RMC batch plant.

REFERENCES

AASHTO. (2004). Report M-241. In: Standard specification for transportation materials and methods of sampling and testing. 24th ed. AASHTO, Washington, DC.

ACI. (1991). Guide for the use of volumetric-measuring and continuous-mixing concrete equipment: Report 304.6R-91. ACI, Detroit, MI.

ACI. (1994). Manual of concrete practice, part 1 – materials and general properties of concrete. ACI, Detroit, MI.

ASTM. (2001). Standard Specification for Concrete Made By Volumetric Batching and Continuous Mixing: Report C685/C685M-01. ASTM, West Conshohocken, PA.

Ferraris, C. F. (2001). Concrete mixing methods and concrete mixers: state of the art. J. Res. Natl. Inst. Stand. Technol., 106 (2), 391-399.

Graham, D., Smith, S. D. and Tommelein, I. D. (2005). Cost of concrete placement for contractors. 21st Annual ARCOM Conference, 7-9 September 2005, University of Salford, London. Under review.

NRMCA. (2001). Industry fact sheet. http://nrmca.org. (Accessed: 10/05/05).

Rother, M. and Shook, J. (1998). Learning to see: value stream mapping to create value and eliminate muda. Lean Enterprise Inst., Brookline, MA.

Sonnenberg, R. (1998). Concrete mixers and mix systems. Conc. Precast Plant Technol., 64.

Tommelein, I. D. and Li, A. E. Y. (1999). Just-in-time concrete delivery: mapping alternatives for supply chain integration. 7th Annual IGLC Conference, 26-28 July 1999, Berkeley, CA., 97-108.

VMMB. (2001). Report: VMMB 100-01 Volumetric mixing standards. VMMB, Silver Spring, MD.

VMMB. (2005). History of the volumetric mixer. http://vmmb.org. (Accessed: 10/05/05)