EXPLORING THE POTENTIAL OF ACCOUNTING FOR EMBODIED CARBON EMISSIONS IN BUILDING PROJECTS IN UGANDA

Nathan Kibwami[1] and Apollo Tutesigensi

Institute for Resilient Infrastructure, School of Civil Engineering, University of Leeds, Leeds, LS2 9JT, UK

With the well-known impacts that the building sector has on the environment, accounting for embodied carbon (EC) emissions in building projects is emerging as an important consideration in project development approval processes. National and international initiatives on accounting for EC have been registered and in some countries, accounting for EC has been made mandatory. However, largely, the potential of accounting for EC is yet to be fully realised due to the prevailing limited integration of EC in building projects. In this paper, the potential of accounting for EC in the building sector in Uganda is explored using a two-stage approach. The first stage comprised of three steps: process discovery − to document prevailing practices; process modelling − to create an as-is system representing prevailing practices, and verification − using semi-structured interviews to ascertain whether the as-is system had been created correctly. The second stage comprised of two steps: analysis and process modelling. Analysis involved drawing evidence from the literature and the verified practices, in order to identify opportunities of introducing EC accounting. Through process modelling, a new (to-be) system incorporating EC was then created. Results from the verification step showed that the prevailing practices had been modelled correctly, further confirming the absence of EC accounting in the referenced context. Analyses revealed that incorporating EC accounting in building projects is plausible but should largely consider national circumstances, such as development approval processes. The overall findings shed more light on the increasingly appreciated phenomenon of accounting for EC in building projects. It is hoped that this work can remind, and at the same time, inform construction management practice and policy of the responsibilities the building sector has towards promoting sustainable construction.

Keywords: embodied carbon, process modelling, sustainable construction, Uganda.

INTRODUCTION

The fifth Intergovernmental Panel on Climate Change report released in 2014 noted that over the past four decades, carbon emissions (greenhouse gases like carbon dioxide) from the building sector have more than doubled (IPCC 2014). Prevailing initiatives suggest that managing carbon emissions requires 'accounting' (BS EN 15978:2011), otherwise, it is impossible to manage what cannot be accounted for. Meanwhile, there is a justified focus on accounting for carbon emissions occurring in the operation phase of buildings (e.g. from heating, lighting, cooking etc.) since this phase accounts for the largest (circa 80%) proportion of buildings' life time emissions (Kua and Wong 2012; Sartori and Hestnes 2007). However, as buildings are

[1] cnnk@leeds.ac.uk

Kibwami, N and Tutesigensi, A (2015) Exploring the potential of accounting for embodied carbon emissions in building projects in Uganda *In:* Raiden, A B and Aboagye-Nimo, E (Eds) *Procs 31st Annual ARCOM Conference,* 7-9 September 2015, Lincoln, UK, Association of Researchers in Construction Management, 327-336.

progressively designed to stricter operation-energy efficiency, operation carbon (OC) emissions will gradually reduce. Unfortunately, this will be at the expense of increasing the relative proportion and magnitude of embodied carbon (EC) emissions which are associated with various activities (e.g. material manufacture and transportation) of constructing buildings (Iddon and Firth 2013; Monahan and Powell 2011). Therefore, a focus on accounting for EC is necessary.

Accounting for carbon emissions, which basically involves obtaining the mathematical product of process data (e.g. kg of material) and a carbon emission factor (e.g. $kgCO_2$ per kg), is not a straightforward procedure when it comes to EC. Unsurprisingly, disagreements in this area not unusual especially regarding what EC constitutes (e.g. Sathre *et al*. (2012) and Purnell (2012)). Even standards have not been exhaustive in this regard; the emissions boundary suggested in the European CEN TC 350 standards (BS EN 15978:2011) excludes workforce transportation, yet national initiatives (SFC and Carbon Trust 2010) suggest otherwise. While some commentators have called for development of 'an embodied energy measurement protocol' (Dixit *et al*. 2012), others have concluded that *"there is no single definition of building embodied carbon emissions"* (Li *et al*. 2014: 402). Nonetheless, EC is largely defined, and accounted for, in alignment with boundaries relating to construction projects, namely: cradle-to-gate EC, cradle-to-site EC, cradle-to-construction completion EC, cradle-to-grave EC, and cradle-to-cradle EC (Hammond and Jones 2011; Dixit *et al*. 2010).

Budding practices suggest that EC accounting should be contextualised (e.g. country-based) although their scope limits broader integration of EC in building projects. These practices, whether voluntary (see Franklin and Andrews 2013; RICS 2012) or mandatory (see Brighton and Hove 2013) put emphasis on the cradle-to-gate boundary. While this boundary arguably presents the least complications in accounting for EC, it does not give a complete picture of a building project since activities like construction are excluded. Meanwhile, consideration of other boundaries such as cradle-to-cradle, requires making difficult assumptions (energy-use behaviour, number of renovations, demolition activities, etc.) about the operation phase of a building (Hong *et al*. 2014) and thus uncertainties in EC can manifest. Integrating EC accounting in building projects in a manner that does not underrepresent activities and yet minimises uncertainties requires consideration of the cradle-to-construction completion boundary. However, this boundary necessitates consideration of the whole buildings' development approval process, that is, from planning permission to commissioning. Since development approval regimes vary by country, there is need for significant contextualisation of EC accounting, that is, development of country-based EC accounting systems. In that way, the potential of accounting for EC in building projects will be realised at a broader scale.

In this paper, the potential of accounting for EC in the development approval process in the building sector in Uganda is explored with two motives. Firstly, developing an as-is system describing the prevailing practices and secondly, propose a new system that incorporates accounting for EC. Uganda is the focus because: (1) prevailing efforts of accounting for EC are concentrated in developed countries, with little or no consideration in developing countries yet, embodied energy of buildings in developing countries can be large (Levine *et al*. 2007); (2) due to the authors' acquaintance with construction practices in that context, coupled with other reasons related to ease of data collection; and (3) since accounting for EC can directly or indirectly offer benefits such as driving innovation, use of locally available materials, and creation of

employment opportunities (Embodied Carbon Industry Task Force 2014), there is a business case in arguing for EC accounting in such a developing country.

METHODOLOGY

In order to explore the potential of accounting for EC emissions in building projects in Uganda, the prevailing practices were described and new proposals suggested.

Describing the prevailing practices

In order to describe the prevailing practices, process modelling was used to create a process model of the development approval process (as-is system). A system can be defined as an *"integrated composite of people, products, and processes that provide a capability to satisfy a stated need or objective"* (Sage and Rouse 2009: 1363). Usually, process modelling initiatives are motivated by the desire to improve a system and such initiatives should begin with describing the as-is state of affairs (Debevoise and Geneva 2011). In order to develop the as-is system, three steps were followed: process discovery, modelling, and verification.

Process discovery was intended to discover process space, process topology, and process attributes (Debevoise and Geneva 2011; Verner 2004) of the existing development approval process. Under process space, the intention was to describe all the relevant sub-processes and their associated interaction. This was based on review of relevant literature such as regulations, together with the authors' experience and anecdotal evidence about the context. In process topology, the aim was to identify activities and their flow logic. The output from process discovery was a summary of sub-processes, with their corresponding activities, and flow logic.

Modelling was conducted to produce a process model diagram of the as-is system and this involved defining process scope, delineating high-level process map, and drawing the process model diagram. In defining process scope, the important aspects addressed included: how a process starts, what determines when it is complete, and the different ways in which it could end (Silver 2011: 57). Meanwhile, the high-level process map involved enumerating the major activities of the process. The high-level activities also acted as the process-phases of the overall process model (Debevoise and Geneva 2011). Using Microsoft Visio 2013 software, a process model diagram with two tiers was constructed. Essentially, activities identified in the high-level formed the first tier of the diagram which was expandable into the second tier consisting of child-level diagrams. Inbuilt software functions were used to check the integrity of the process model with regard to the process modelling rules. The adopted modelling rules conformed to the Business Process Modelling and Notation (BPMN) modelling grammar (OMG 2014). This notation, which is widely preferred in process modelling (Silver 2011; Takemura 2008), provides graphical constructs and rules prescribing how to combine the graphical constructs in order to describe processes (Recker and Rosemann 2010; Wand and Weber 2002).

Verification was conducted to empirically ascertain whether the as-is system had been constructed rightly. A case study was appropriate since it can be used to describe events, processes, and relationships (Denscombe 2010); an embedded single-case study design (Yin 2014) was adopted. Two local planning authorities that have high rates of construction activities were purposely selected: 'Kampala' district and a neighbouring 'Kira' town council. Eight informants, considered as the subject matter experts (SMEs), four from each authority (i.e. physical planner, architect, engineer, and environmental officer) were purposely selected. Semi-structured interviews

involving face-to-face interaction and use of charts were used to collect data since they accorded flexibility to a discussion and availed respondents a chance to expound ideas (Creswell 2014; Denscombe 2010). In the interview procedure, the as-is system was presented to the informants in form of a chart to offer them an opportunity to easily visualise the end-to-end view of the described processes unlike verbal or written prose. Informants were then asked to describe how the processes shown in the chart are executed in practice. The discussions were recorded and later transcribed.

Using Nvivo 10 software (Bazeley and Jackson 2013), a directed content analysis approach (Hsieh and Shannon 2005) which falls under qualitative data analysis techniques was followed in analysing the data. Directed content analysis is usually used to *"validate or extend conceptually a theoretical framework or theory"* (Hsieh and Shannon 2005: 1281). In the approach, codes/themes were predefined based on the as-is system. For instance, an activity in the as-is system described as 'prepare documentation' was converted to a theme of the same name. Supportive words and phrases in the data were then coded to such a predefined theme and where predetermined themes were deemed inapplicable, new ones were defined. This approach was not largely amenable to statistical data processing, since the output was mostly nonnumeric, and as such, evidence was presented by showing coding references (i.e. number of times an aspect is coded), codes with exemplars, and descriptive excerpts from interview transcripts (Hsieh and Shannon 2005). The analysis structure was grounded in theoretical propositions that led to the investigation, together with examination of rivalling explanations (Yin 2014). The proposition stated that the as-is process model developed was not a true representation of reality; confirming this proposition required examining rivalling explanations such as evidence showing that the system did not represent reality. The proposition was to be rejected if no sufficient rivalling explanations were found. Meanwhile, this research involved human participants and therefore ethical requirements such as seeking for ethical approvals were appropriately fulfilled.

Derivation of proposals

Critical reflection using literature and the ascertained prevailing situation, as depicted by the as-is system, was carried out in order to identify opportunities to incorporate EC accounting. Consequently, a new (to-be) system was proposed and presented as a process model diagram.

RESULTS AND DISCUSSIONS

The structure of the as-is system, results from its verification, and the structure of the new (to-be) are all presented and discussed.

As-is system depicting the prevailing practices

The as-is system (see Figure 1) consists of three linked pools, each representing a sub process. Each pool has activities (rounded-edge boxes) connected with arrows and diamond-shaped decision gateways to show logic of flow. Activities are presented at a collapsed high-level but contain child-level activities when expanded. The major sub-processes contained in the development approval process in Uganda were: (1) environmental impact assessment (EIA) sub-process (National Environmental Act Cap 153, Environmental Impact Assessment (EIA) Regulations 1998); (2) building project (BP) sub-process (Physical Planning Act 2010, Building Control Act 2013), and (3) development permission (DP) sub-process (Physical Planning Act 2010, Building Control Act 2013). The EIA sub process (refer to EIA pool in Figure 1)

started when there was a need to carry out an EIA, born by the fact that the building project fell into a category for which EIA was mandatory. The EIA sub process started with an activity of 'prepare brief' and was complete when the developer was informed by the authority about the decision of approval, rejection, or deferring of the project. The BP sub-process (refer to BP pool in Figure 1) was envisaged to start when the client or developer solicited services of a consultant to work on a prospective building. It started with 'prepare inception report' and ended with commissioning of the completed building. The need for permission to undertake a development triggered the DP sub process (refer to DP pool in Figure 1). It started with 'prepare documentation' and was complete when the applicant/developer was informed of the decision. The decision was observed to be in various states: approved conditionally, approved unconditionally, rejected, or deferred.

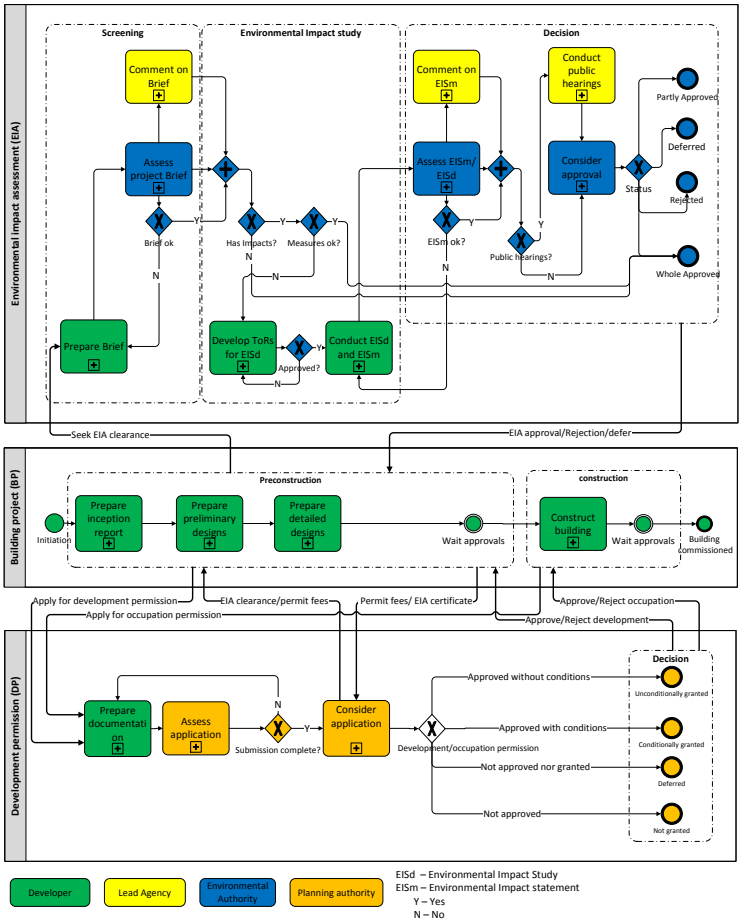

Figure 1: Existing development approval process in Uganda (as-is system)

Verification of the as-is system

At the end of a two-week data-collection period, interviews each lasting about 30 minutes had successfully been conducted with: two physical planners, one engineer, one environmental officer, one health inspector, one environmentalist, and one land surveyor. Unsuccessful appointments warranted inclusion of some other SMEs who were not on the initial list. Analyses revealed that generally, all the three sub-processes had sufficiently been modelled correctly. An example of coding references and exemplars with regard to one activity/theme selected in each of the three sub-processes is shown in Table 2. Most high-level activities/themes registered coding references and exemplars. Upon inspection, no significant rival explanations were identified in the three sub process. As such, it was concluded that the as-is system was

reliably a true representation of reality. For the EIA sub-process however, the activity of conducting public hearings did not register any coding references but no rival explanations were found. This perhaps implied that public hearings were a rare occurrence according to the informants' experiences or usually avoided because of their associated consequences. Six of the linkages (refer to Figure 1) of the process model (i.e. apply for development permission, approve/reject development, seek EIA clearance, EIA approval/rejection/defer, apply for occupation permission, and approve/reject occupation) connecting the three sub-processes were also verified to be reliably accurate, since they registered coding references and exemplars. For instance: *"clients bring in files through customer care, that is, we have a tent outside there"* (Physical planner A) − implying application for development permission; *"…we then approve the drawings and we give a client a copy, we also issue an approval letter"* (Physical planner B) − implying approval of development; and *"…you've finished the structure, you [developer] have to apply for an occupation permit"* (Physical planner A) − implying applying for occupation permit.

Table 1: Coding references and exemplars

	High-level activity		Exemplars
	Theme description	Coding ref.	
DP	Assess application (by local authority)	7	"…when you submit the drawings, we make for you an assessment […] we have acknowledged that we have received the drawings" (Physical Planner B). "The physical planner looks through to see those that meet the basic requirements for assessment" (Physical planner A). "My role there is to see adequacy of the plot, the proposed development. I check plot dimension, plot area and shape" (Land surveyor).
BP	Construction (by developer/ consultant)	6	"We don't have too much capacity to be everywhere at the right time, meaning, some construction can go on without being detected, yet they are building wrongly" (Health Inspector). "Then after approval, we have what we call a Job card, its yellow. It shows all the stages of construction of the building. So the building inspector is supposed to tick […] you call him, he signs […] so per stage you have to call him" (Physical planner A). "…we are supposed to assess after the project is complete, more especially perhaps may be when we demand for an occupation permit (Physical planner B). "If it is a storied building/ high-rise, vertical developments, there are other requirements that are needed, maybe supervision…" (Physical planner B).
EIA	Prepare Brief (by developer/ consultant)	2	"So, the way it all starts, you have to have a project brief" (Environmentalist).

Inspection of some variations which were identified between the process model and empirical observations revealed that in the process model, some activities had been captured at an aggregate level. This confirmed that regulations do not necessarily have to be prescriptive (Penny et al. 2001), implying that there can be flexibility for the practice to prescribe how to comply. Indeed, in the EIA sub-process, empirical evidence suggested that the practice is structured into three phases: screening, EI study, and decision-making. The revised model took account of these finer details (refer to EIA process pool in Figure 1). Similarly, some observations were also noted on the linkages connecting some sub-processes. Between the BP and DP processes, it was discovered that usually, the EIA process is initiated in the DP process but not in the BP process as earlier envisaged. An environmental officer held that *"once I request for an EIA, the client goes and gets a consultant who must be registered with*

NEMA [National Environment Management Authority]". This implied that the developer was advised on whether an EIA is required only after making an application for building permit. Another identified linkage was one related to payments of permit fees. When the application was assessed, the developer was notified about the amount of fees; *"the clients come back, we call the clients, and they pick those plans, then they go and pay"* (Physical planer A). This extra information warranted addition of two new linkages (i.e. EIA clearance/permit fees, and Permit fees/EIA certificate) that had not been initially captured (see Figure 1).

Proposal for introducing embodied carbon accounting

Besides verifying that existing practices had been modelled correctly, it was empirically ascertained that EC accounting in building projects was not carried out. This was not surprising since, EC accounting is relatively a new area and perhaps, less would be expected of such a developing country like Uganda. Therefore, this warranted for a need to introduce a 'new' sub-process of accounting for EC emissions. This new sub-process was appropriately integrated in the existing sub-processes of EIA, DP, and BP as shown in Figure 2. However, as argued in this work, the EC accounting boundary should be cradle-to-construction completion. This implies that the EC considered should include manufacture and transportation of materials, transportation of labour/workforce, use and transportation of plant/equipment (Kibwami and Tutesigensi 2014). To take into account of these suggestions, various activities within the EIA, BP, and DP sub-processes would have to be revised. As part of EIA, EC accounting could be included as a requirement for environmental approvals. Similarly, as part of DP, EC accounting of prospective projects could be included as a requirement for issuing building and occupation permits. With regard to BP, preliminary carbon estimates can be made during early designs, detailed carbon estimates during detailed designs, and interim carbon estimates during the construction stage. Similar to practices documented elsewhere (see Moncaster and Symons 2013), there would be a need to identify (or develop) appropriate EC calculation methods and software tools based on databases that take into account national circumstances. Certainly, empirical evaluation of any proposed system is necessary to ascertain whether the system fulfils acceptable principles of carbon accounting such as relevance and transparency (WRI/WBCSD 2005), whether it can improve sustainability as expected of a carbon measurement initiative (RICS 2012), and whether there are any challenges of implementing it in practice.

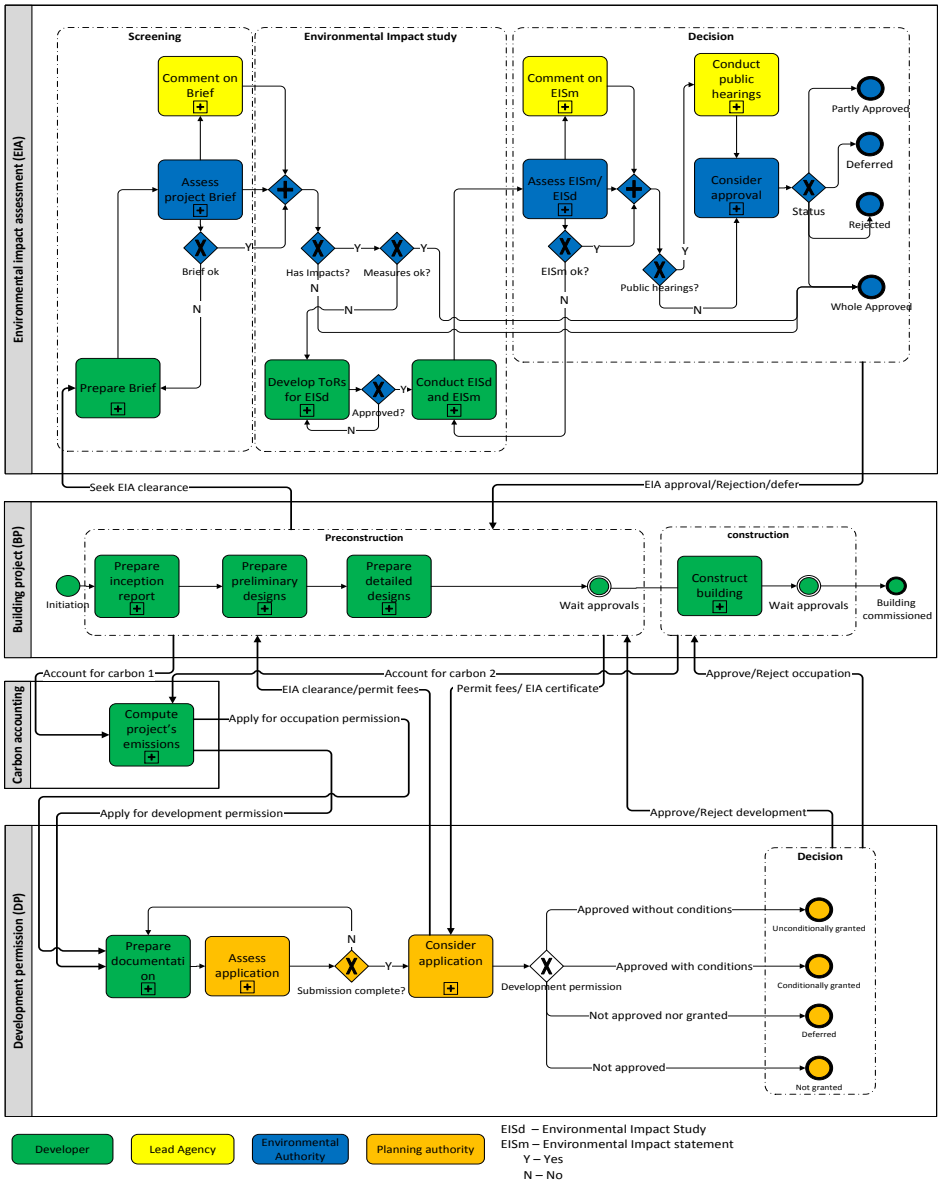

Figure 2: Proposed development approval process for Uganda (to-be system)

CONCLUSIONS

With the recognised need for reducing carbon emissions associated with buildings, the importance of accounting for EC emissions cannot be over emphasised. However, there is limited integration of EC accounting in building projects due to the cradle-to-gate boundary used in prevailing accounting initiatives. This, it has been argued, limits greater realisation of the potential in accounting for EC. The suggested remedy requires considering the cradle-to-construction completion boundary, which demands significant contextualisation of EC accounting. Using a context of Uganda, the potential of accounting for EC in building projects was explored. An as-is system which describes the prevailing development approval process was derived using process modelling. From a case study involving two local authorities, it was empirically ascertained that accounting for EC was not carried out. Consequently, in form of a process model, a system that integrates EC into the development approval process was proposed based on the cradle-to- construction completion boundary. It is hoped that the proposed system will lead to greater realisation of the potential of incorporating EC in building projects in order to promote sustainable construction.

However, for the proposals to be implemented, further research is necessary to develop suitable calculation methods, software tools, and databases for quantifying carbon emissions. In addition, empirical research is necessary to evaluate any such proposed system. Such evaluation would involve, among other issues, ascertaining whether the system fulfils acceptable principles of carbon accounting, whether it can promote sustainable construction, and identifying the challenges of implementing it in practice. Meanwhile, the methodology that was employed in this work has demonstrated the utility in using process modelling supported by verification interviews. The authors recommend this methodology to other areas of construction management research especially where research questions related to 'improvement of a prevailing situation' are involved.

REFERENCES

Bazeley, P and Jackson, K (2013) *"Qualitative data analysis with NVivo"*. 2nd ed. London: SAGE.

Brighton and Hove (2013) *"Brighton and Hove City council's local development framework"*. Available at: http://goo.gl/KI888c. (accessed February 28 2015)

BS EN 15978:2011 (2011) *"Sustainability of Construction works - Assessment of environmental performance of buildings - Calculation method"*. The British Standards Instituition.

Creswell, J W (2014) *"Research design : qualitative, quantitative, and mixed methods approaches"*. 4th ed. Los Angeles, Calif. ; London: Sage.

Debevoise, T and Geneva, R (2011) *"The MicroGuide to process modeling in BPMN 2.0"*. 2nd ed. Lexington, Virginia: Advanced Component Research, Incorporated.

Denscombe, M (2010) *"The good research guide: for small-scale social research projects"*. GB: Open University Press.

Dixit, M K *et al*. (2010) Identification of parameters for embodied energy measurement: A literature review. *"Energy and Buildings"*, **42**(8), 1238-1247.

Dixit, M K *et al*. (2012) Need for an embodied energy measurement protocol for buildings: A review paper. *"Renewable and Sustainable Energy Reviews"*, **16**(6), 3730-3743.

Embodied Carbon Industry Task Force (2014) *"Proposals for Standardised Measurement Method and Recommendations for Zero Carbon Building Regulations and Allowable Solutions"*. Available at: http://goo.gl/OLv6gt. (accessed March 27 2015)

Franklin and Andrews (2013) *"CESMM4 Carbon and Price Book 2013"*. Available at: http://goo.gl/LCH280. (accessed March 23 2015)

Hammond, G and Jones, C (2011) *"Inventory of Carbon Energy (ICE), Version 2.0"*. University of Bath, UK.

Hong, J *et al*. (2014) Greenhouse gas emissions during the construction phase of a building: a case study in China. *"Journal of Cleaner Production"*.

Hsieh, H-F and Shannon, S E (2005) Three Approaches to Qualitative Content Analysis. *"Qualitative Health Research"*, **15**(9), 1277-1288.

Iddon, C R and Firth, S K (2013) Embodied and operational energy for new-build housing: A case study of construction methods in the UK. *"Energy and Buildings"*, 67, 479-488.

IPCC (2014) *"Climate Change 2014: Mitigation of Climate Change. Contribution of Working Group III to the Fifth Assessment Report of the Intergovernmental Panel on Climate Change"*. Available at: http://goo.gl/7vNCsv. (accessed January 5 2015)

Kibwami, N and Tutesigensi, A (2014) Mathematical modelling of embodied carbon emissions of building projects. In: A.B. Raiden and E. Aboagye-Nimo, (Eds), *"Procs 30th Annual ARCOM Conference, 1-3 September 2014"*, Portsmouth, UK. Vol. 1, 53-62.

Kua, H W and Wong, C L (2012) Analysing the life cycle greenhouse gas emission and energy consumption of a multi-storied commercial building in Singapore from an extended system boundary perspective. *"Energy and Buildings"*, **51**, 6-14.

Levine, M *et al*. (2007) Climate Change 2007: Mitigation. In: B. Metz, *et al*. (eds.) *"Residential and commercial buildings. Contribution of Working Group III to the Fourth Assessment Report"*. Cambridge, United Kingdom and New York, USA.: Intergovernmental Panel on Climate Change.

Li, X *et al*. (2014) An assessment framework for analyzing the embodied carbon impacts of residential buildings in China. *"Energy and Buildings"*, **85**, 400-409.

Monahan, J and Powell, J C (2011) An embodied carbon and energy analysis of modern methods of construction in housing: A case study using a lifecycle assessment framework. *"Energy and Buildings"*, **43**(1), 179-188.

Moncaster, A M and Symons, K E (2013) A method and tool for 'cradle to grave' embodied carbon and energy impacts of UK buildings in compliance with the new TC350 standards. *"Energy and Buildings"*, **66**, 514-523.

OMG (2014) *"Object Management Group: Business Process Model and Notation>Documents"*. Available at: http://goo.gl/9C16Hi. (accessed February 7 2014)

Penny, J *et al*. (2001) The practicalities of goal-based safety regulation. In: *"9th Safety–Critical Systems Symposium"*, Bristol, UK.

Purnell, P (2012) Response to the Comment on *"Material Nature versus Structural Nurture: The Embodied Carbon of Fundamental Structural Elements"*. *"Environmental Science and Technology"*, **46**(6), 3597-3598.

Recker, J and Rosemann, M (2010) The measurement of perceived ontological deficiencies of conceptual modeling grammars. *"Data and Knowledge Engineering"*, **69**(5), 516-532.

RICS (2012) *"Methodology to calculate embodied carbon of materials"*. Available at: http://goo.gl/4YZwvt. (accessed October 19 2012)

Sage, A P and Rouse, W B (2009) *"Handbook of Systems Engineering and Management"*. 2nd ed. John Wiley and Sons.

Sartori, I and Hestnes, A G (2007) Energy use in the life cycle of conventional and low-energy buildings: A review article. *"Energy and Buildings"*, 39(3), 249-257.

Sathre, R *et al*. (2012) Comment on *"Material Nature versus Structural Nurture: The Embodied Carbon of Fundamental Structural Elements"*. *"Environmental Science and Technology"*, **46**(6), 3595-3596.

SFC and Carbon Trust (2010) *"Strategic Forum for Construction and Carbon Trust, Construction carbon 15% target by 2012, Scoping paper "*. *Available at: http://goo.gl/tAMgIm. (accessed October 25 2014)*

Silver, B (2011) "BPMN method and style: with BPMN implementer's guide". 2nd ed. Aptos, Calif.: Cody-Cassidy Press.

Takemura, T (2008) Formal Semantics and Verification of BPMN Transaction and Compensation. 284-290.

Verner, L (2004) *"The Challenge of Process Discovery"*. Available at: http://goo.gl/0fgjL8. (accessed March 28 2014)

Wand, Y and Weber, R (2002) Research Commentary: Information Systems and Conceptual Modeling--A Research Agenda. *"Information Systems Research"*, **13**(4), 363-376.

WRI/WBCSD (2005) *"The Greenhouse Gas Protocol for project accounting"*. World Resources Institute/World Business Council for Sustainable Development.

Yin, R K (2014) *"Case study research: design and methods"*. 5th ed. Thousand Oaks, Calif.: Sage Publications.